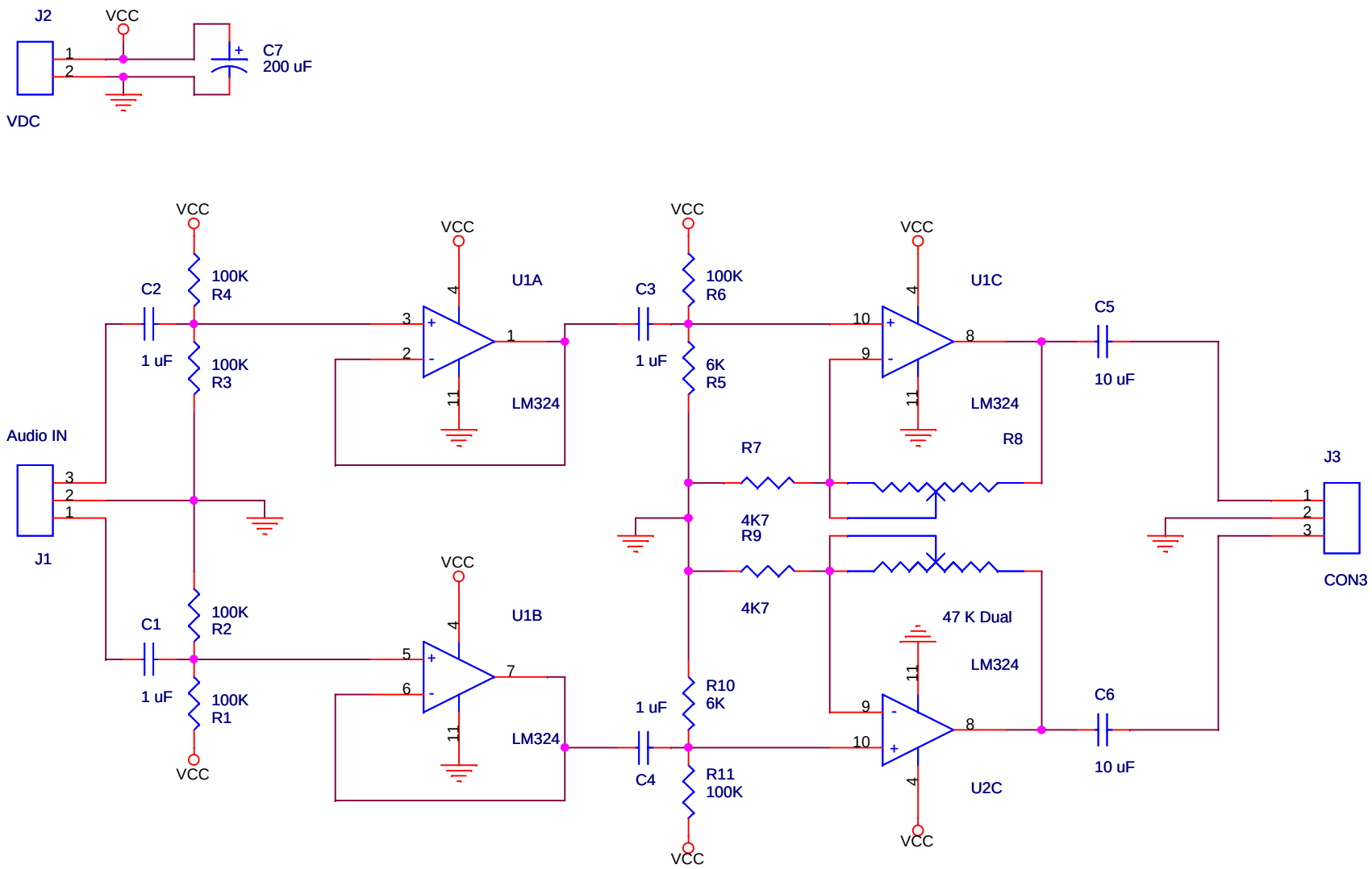

Title	Preamplificador con LM324.	
Size A	Document Number www.simplificate.es	Rev 0
Date: Wednesday, November 09, 2011	Sheet 1 of 1	